Data sheet

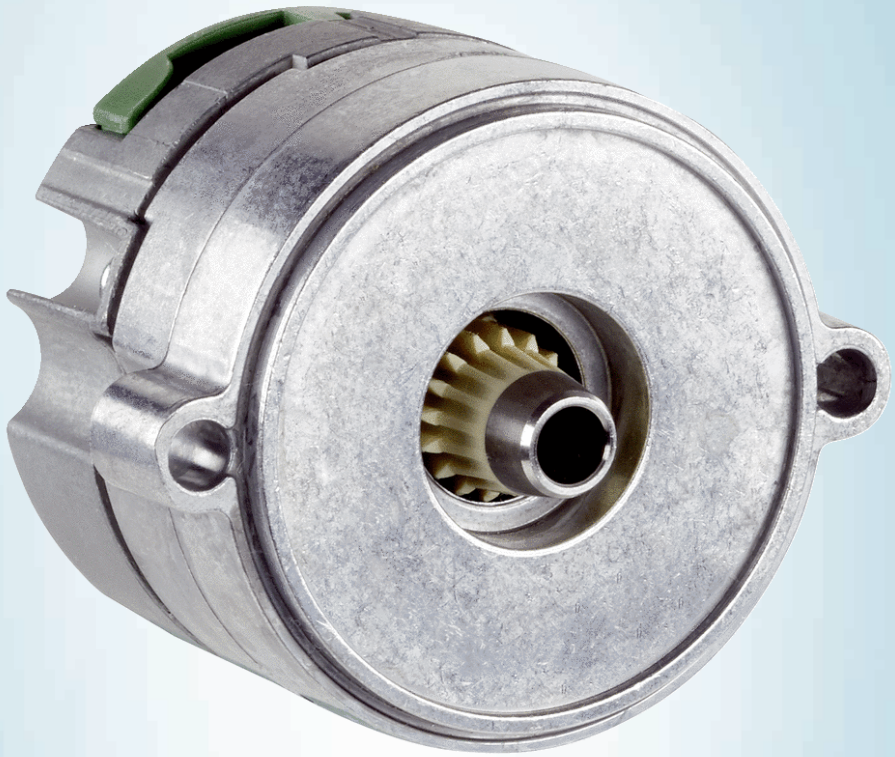

EEM37-2KF0B017A

EES/EEM37-S

SAFE MOTOR FEEDBACK SYSTEMS

SICK
Sensor Intelligence.

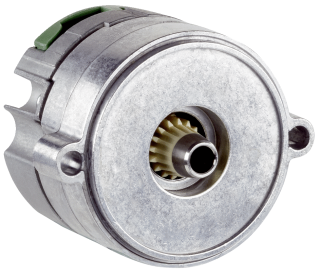

Illustration may differ

Ordering information

Type	part no.
EEM37-2KF0B017A	1086280

Other models and accessories ➜ www.sick.com/EES_EEM37-S

Detailed technical data

Features

Items supplied	M3 mounting screws for encoder housing not included with delivery.

Safety-related parameters

Safety integrity level	SIL 2 (IEC 61508), SILCL3 (EN 62061) [1]
Category	3 (EN ISO 13849)
Systematic suitability	SC 3 (IEC61508)
Test rate	24 h
Maximum demand rate	216 µs
Performance level	PL d (EN ISO 13849)
Basis for safety function	Safe singleturn absolute position
Safety-related resolution	Channel 1 = 15 or 17 bit, channel 2 = 15 or 17 bit
PFH (mean probability of a dangerous failure per hour)	26×10^{-9} [2]
T_M (mission time)	20 years
Safety-related accuracy	1° [3]

[1] For more detailed information on the exact configuration of your machine/unit, please consult your relevant SICK branch office.
[2] The values displayed apply to a diagnostic degree of coverage of 90%, which must be achieved by the external drive system.
[3] The safety-related accuracy indicates the maximum positioning error limit with which the safety functions can be supported.

Performance

Position	
Resolution per revolution	17 bit
System accuracy	± 240 ″, nominal position, 25 °C, filter setting 21 kHz [1]
	± 160 ″, Nominal position, 25 °C, filter setting 1 kHz [1]
Signal noise (σ)	± 20 ″ (nominal position, 25 °C, filter setting 21 kHz)
Number of the absolute ascertainable revolutions	4,096
Available memory area	8,192 Byte

[1] See diagram for error limits (default filter setting: 21 kHz).

Measurement step per revolution	131,072

[1] See diagram for error limits (default filter setting: 21 kHz).

Interfaces

Code sequence	Increasing, when turning the shaft For clockwise rotation, looking in direction “A” (see dimensional drawing)
Communication interface	HIPERFACE DSL®
Initialization time	Max. 500 ms [1]
Measurement external temperature resistance	32-bit value, without prefix (1 Ω) 0 ... 209.600 Ω [2]

[1] From reaching a permitted operating voltage.
[2] Without sensor tolerance; at −17 °C ... +167 °C: NTC +-2K (103 GT); PTC+-3K (KTY84/130/PT1000).

Electronics

Connection type	Male connector, 4-pin
Supply voltage	7 V ... 12 V
Warm-up time voltage ramp	Max. 180 ms [1]
Current consumption	≤ 150 mA [2]

[1] Duration of the voltage ramp between 0 and 7.0 V, see diagram “Current consumption” in the diagram section.
[2] Current rating applies when using interface circuit suggestions as shown in HIPERFACE DSL ® manual (8017595).

Mechanics

Shaft version	Tapered shaft
Dimensions	See dimensional drawing
Centering collar	Reduced 0.7 mm
Weight	≤ 0.1 kg
Moment of inertia of the rotor	1 gcm^2
Operating speed	≤ 12,000 min^{-1}
Angular acceleration	≤ 500,000 rad/s^2
Permissible radial shaft movement	± 0.15 mm
Permissible axial shaft movement	± 0.5 mm

Ambient data

Operating temperature range	–40 °C ... +115 °C [1]
Storage temperature range	–40 °C ... +120 °C, without package
Relative humidity/condensation	85 %, Condensation not permitted
Resistance to shocks	100 g, 6 ms (according to EN 60068-2-27)
Frequency range of resistance to vibrations	50 g, 10 Hz ... 2,000 Hz (EN 60068-2-6)
EMC	According to EN 61000-6-2: 2016, EN 61000-6-4: 2006, IEC 6100-6-7: 2014 [2]
Enclosure rating	IP30, When cover is closed and mating connector is attached (IEC 60529-1) [3]
Operating height (above sea level)	2,000 m

[1] For typical values for self-heating, see diagram “Electrical self-heating” in the diagram section. see section “Mounting” in the operating instructions (8021414/8021265).
[2] According to the listed standards, EMC is guaranteed if the motor feedback system with mating plug inserted is connected to the central grounding point of the motor controller via a cable shield. If other shielding concepts are used, users must perform their own tests. Class A device.
[3] When using the strands (2079920).

Certificates

EU declaration of conformity	✓
UK declaration of conformity	✓
ACMA declaration of conformity	✓
China-RoHS	✓
EC-Type-Examination approval	✓
Information according to Art. 3 of Data Act (Regulation EU 2023/2854)	✓

Classifications

ECLASS 5.0	27270590
ECLASS 5.1.4	27270590
ECLASS 6.0	27270590
ECLASS 6.2	27270590
ECLASS 7.0	27270590
ECLASS 8.0	27270590
ECLASS 8.1	27270590
ECLASS 9.0	27270590
ECLASS 10.0	27273805
ECLASS 11.0	27273901
ECLASS 12.0	27273901
ETIM 5.0	EC001486
ETIM 6.0	EC001486
ETIM 7.0	EC001486
ETIM 8.0	EC001486
UNSPSC 16.0901	41112113

Dimensional drawing

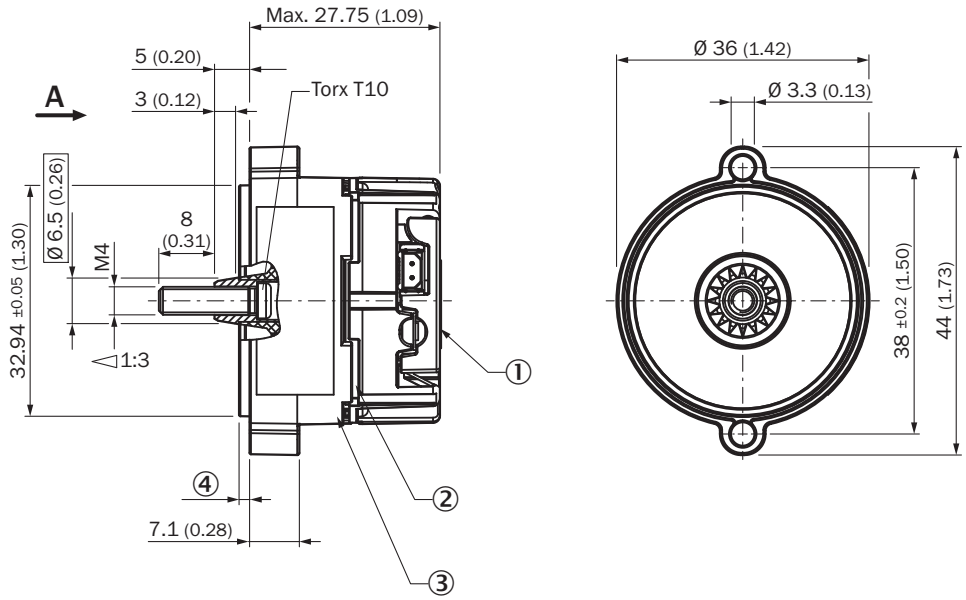

Dimensions in mm (inch)
screw M4 not included (see under accessories)
① measuring point for vibrations
② Design-related gap
③ Measuring point for operating temperature
④ Centering collar: Standard 1.5 mm; reduced 0.7 mm

Attachment specifications

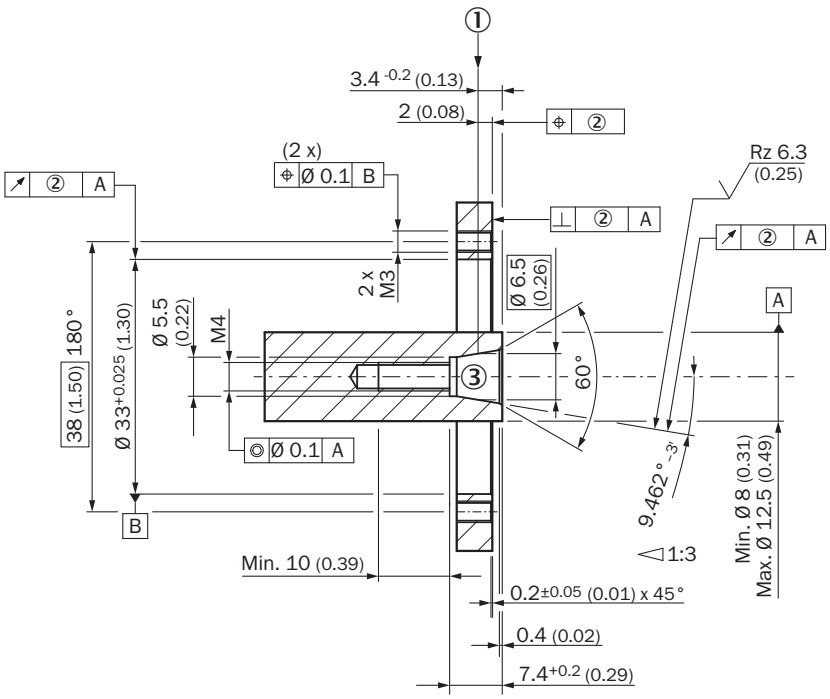

read out axial position: positive value shows movement of rotor away from the motor flange; negative value shows movement of rotor towards the motor flange

① Nominal position
② The size of the tolerance reduces the permissible wave movement, see data sheet
③ Threaded holes in accordance with DIN 13 with recesses in accordance with DIN 76 min. 1.05 x thread diameter

Anschlussbelegung Temperature sensor pin assignment

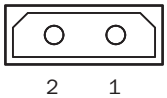

PIN	Signal	Explanation
1	T+	Thermistor connection
2	T-	Thermistor connection (to ground)
Recommended outer diameter of set of stranded wires: 2.2 mm ± 0.1 mm		
Recommended mating connector: Harwin M80-8990205		

Anschlussbelegung Supply/Communication pin assignment

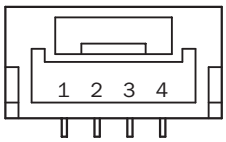

integrated in motor cable = J, K

PIN	Signal	Explanation
1	–	Not connected - no function
2	$+U_S$/DSL+	Supply 7 V ... 12 V
3	GND/DSL-	Ground connection
4	–	Not connected - no function
Recommended outer diameter of set of stranded wires: 4 mm +0/-1.5 mm		
Recommended mating connector: JST (GHR-04V-S)		

Diagrams Latency vs. filter frequency

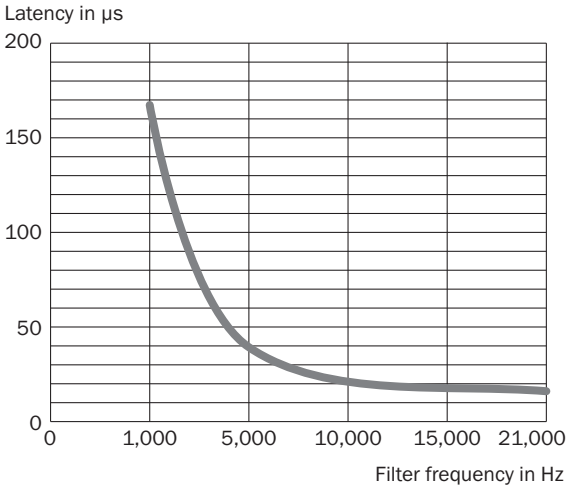

adjustable filter frequencies 21 kHz, 15 kHz, 10 kHz, 5 kHz und 1 kHz - Default setting 21 kHz

Diagrams Power consumption

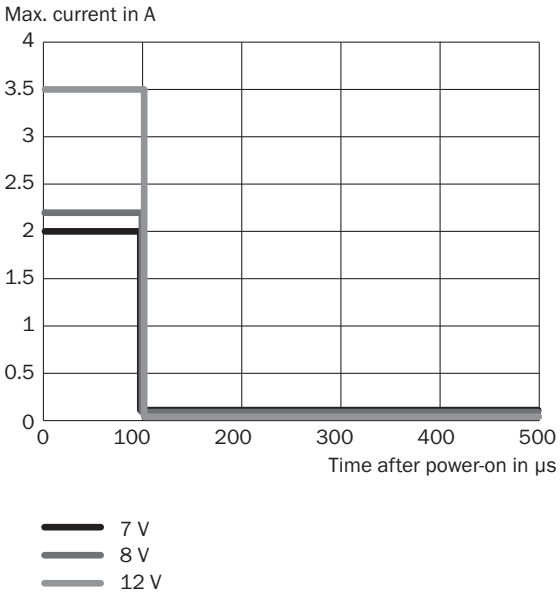

This diagram shows the switch-on current

Diagrams Electrical self-heating

Typ. electrical self-heating, kelvin (K)

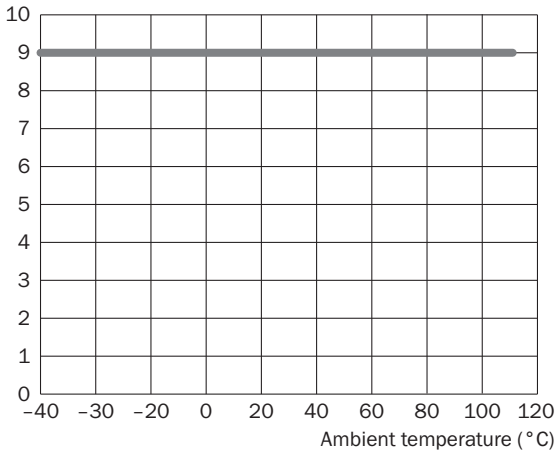

Diagrams Error limits

Typ. effect of temperature on accuracy, normed

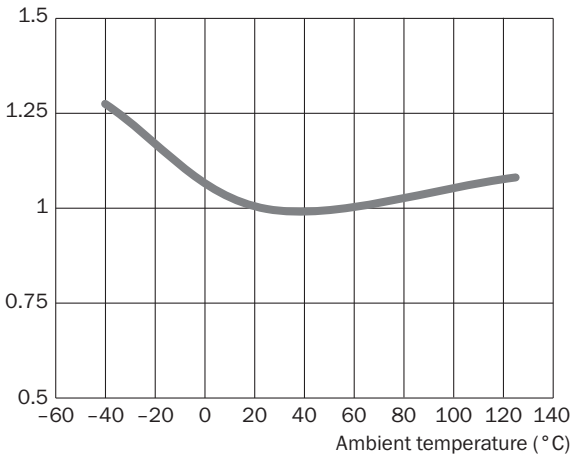

Diagrams Error limits

Typ. effect of axial position on accuracy, normed

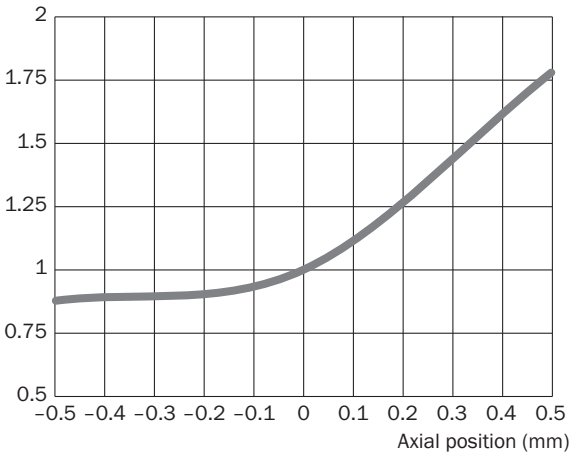

Operation note Supported resources for HIPERFACE DSL®

RID	Name	time overrun [ms]	Description
0x000	ROOT	75	Top node of ressource tree (all nodes reachable from here)
0x001	IDENT	75	Node with pointers to all identification ressources
0x002	MONITOR	75	Node with pointers to all monitoring ressources
0x003	ADMIN	75	Node with pointers to all administration ressources
0x004	COUNTER	75	Node with pointers to all counter ressources
0x005	DATA	75	Node with pointers to all user file ressources
0x006	SENSHUB	75	Node with pointers to all SensorHub ressources
0x080	ENCTYPE	70	Base functionality of encoder
0x081	RESOLUTN	70	Number of steps per turn
0x082	RANGE	70	Number of encoded revolutions
0x083	TYPECODE	70	Type name of encoder
0x084	SERIALNO	70	Serial no of encoder
0x085	FWREVNO	70	Firmware and hardware revision of encoder
0x086	FWDATE	70	Firmware date of encoder
0x087	EESIZE	70	Total amount of memory for user files
0x0c0	TEMPRNG	70	Min and max allowed ambient temperature of encoder
0x0c1	TEMPRTUR	70	Actual ambient temperature of encoder
0x0c4	SUPRANGE	70	Min and max allowed supply voltage of encoder
0x0c5	SUPVOLT	70	Actual supply voltage of encoder
0x0c6	SPEEDRNG	70	Max allowed shaft speed of encoder
0x0c7	SPEED	70	Actual shaft speed of encoder
0x0c8	ACCRANGE	70	Max allowed shaft acceleration of encoder
0x0cb	LIFETIME	70	Operating time and total shaft turns of encoder. For safety variants also remaining mission time is indicated.
0x0cc	ERRORLOG	70	Stored error messages of encoder
0x0cd	HISTOGRM	70	Usage history of encoder in histogram form
0x0d3	AXPOSRNG	70	Min and max allowed axial position of encoder
0x0d4	AXIALPOS	70	Actual axial position of encoder
0x100	RESET	240	Reset or shutdown of encoder
0x101	SETPOS	100	Set encoder position to arbitrary preset value. Offset of position can be read back.
0x104	SETACCES	70	Set or read back access level
0x105	CHNGEKEY	90	Change password for access level
0x107	UWARNING	90	Set or read back user-defined warning boundaries
0x108	FACRESET	255	Reset user settings of encoder to factory defaults
0x109	ENCIDENT	90	Set or read back user-defined encoder index (for multi-axis systems)
0x10a	POSFILT	90	Set or read back position filter settings
0x120	READCNT	70	Read user counter value
0x121	INCCOUNT	90	Increment user counter value
0x122	RESETCNT	110	Reset user counter value
0x130	LOADFILE	255	Load user file
0x131	RWFILE	250	Read from or write to user file
0x132	FILESTAT	70	Read status of user file
0x133	MAKEFILE	190	Create, change or delete user file
0x134	DIR	130	Read directory of accessible user files
0x200	ACCESSIO	70	Access to simple I/Os connected directly to encoder
0x201	MANAGEIO	90	Manage simple I/Os

Operation note Overview of warnings and fault indications

Error type	Error register	Error bit	Description
Position (incremental)	40h	0	A Protocol reset was executed
	40h	1	Acceleration overflow, invalid position
	40h	3	Drift compensating error
	40h	4	Internal error in plausibility, invalid position
	40h	5	Internal error in vector length, invalid position
	40h	6	Internal error in configuration, invalid position
	40h	7	Cross check error
Position (absolute)	41h	0	Error in absolute position in rotation
	41h	1	Error 1 in absolute position in several rotations
	41h	2	Error 2 in absolute position in several rotations
	41h	3	Error 3 in absolute position in several rotations
	41h	4	Position cross check error
Initialization	42h	0	Switch-on self-test undertaken (only safety versions)
	42h	1	Warning safety parameter: error could not be rectified (only safety versions)
	42h	2	Warning safety parameter: error could not be rectified (only safety versions)
	42h	3	Error calibration data
	42h	4	Internal communications error 1
	42h	5	Internal communications error 2
	42h	6	Internal general error
Test	43h	0	Critical temperature
	43h	1	Critical rotor position
	43h	2	Critical supply voltage
	43h	3	Critical rotation speed
	43h	5	Critical overflow
	43h	4	Internal test error
Access to resources	44h	0	Invalid argument given during resource access procedure
	44h	1	Resource access refused due to incorrect access level
	44h	2	Internal error during resoure access
	44h	3	Error when accessing a user file
User defined Warnings	47h	0	User-defined warning 0
	47h	1	User-defined warning 1
	47h	2	User-defined warning 2
	47h	3	User-defined warning 3

Operation note Supported access levels

Access level	User	Standard access key
0	Execute (default setting)	0000 (30 30 30 30h)
1	Operator	1111 (31 31 31 31h)
2	Maintenance	2222 (32 32 32 32h)
3	Authorized client	3333 (33 33 33 33h)
4	User service	4444 (34 34 34 34h)

Recommended accessories

Other models and accessories ➜ www.sick.com/EES_EEM37-S

	Brief description	Type	part no.
Mounting systems			
	• **Description:** Screws with Precote 85-8 coating; M4*14 • **Packing unit:** 100 pieces	BEF-MK-S03	2077358
	• **Description:** Screws with Precote 85-8 coating; M4*14 • **Packing unit:** 10 pieces	BEF-MK-S07	2088239
	• **Description:** Screws with Precote 85-8 coating; M4*14 • **Packing unit:** 500 pieces	BEF-MK-S08	2088240
	• **Description:** Test gauge for SEK/SEL34, SEK/SEL37, and EES/EEM37	BEF-MW-PL	2084768
connectors and cables			
	• **Connection type head A:** Female connector, stranded wire, 4-pin, straight • **Connection type head B:** Flying leads • **Signal type:** HIPERFACE DSL® • **Cable:** 0.2 m, 2-wire • **Description:** HIPERFACE DSL®, unshielded	DOL-0B02-G0M2XC2	2079920

SICK AT A GLANCE

SICK is one of the leading manufacturers of intelligent sensors and sensor solutions for industrial applications. A unique range of products and services creates the perfect basis for controlling processes securely and efficiently, protecting individuals from accidents and preventing damage to the environment.

We have extensive experience in a wide range of industries and understand their processes and requirements. With intelligent sensors, we can deliver exactly what our customers need. In application centers in Europe, Asia and North America, system solutions are tested and optimized in accordance with customer specifications. All this makes us a reliable supplier and development partner.

Comprehensive services complete our offering: SICK LifeTime Services provide support throughout the machine life cycle and ensure safety and productivity.

For us, that is "Sensor Intelligence."

WORLDWIDE PRESENCE:

Contacts and other locations –www.sick.com

SICK
Sensor Intelligence.