Data sheet

ZLD18-2FZ1G8

Z18 Simple Sense

PHOTOELECTRIC SENSORS

SICK
Sensor Intelligence.

Illustration may differ

Ordering information

Type	part no.
ZLD18-2FZ1G8	1099303

Included in delivery: BEF-MU-M18*1 (2)

Other models and accessories → www.sick.com/Z18_Simple_Sense

Detailed technical data

Features

Functional principle	Photoelectric retro-reflective sensor
Functional principle detail	With minimum distance to reflector (dual lens system)
Dimensions (W x H x D)	13.6 mm x 34.8 mm x 21.9 mm
Housing design (light emission)	Hybrid
Thread diameter (housing)	M18
Mounting system type	M18, head/side (24.1 ... 25.4 mm)
Housing color	Blue
Sensing range max.	0 m ... 5 m [1]
Sensing range	0 m ... 4.2 m [1]
Type of light	Visible red light
Light source	LED
Light spot size (distance)	Ø 125 mm (1,000 mm)
Wave length	625 nm

[1] Reflector PL80A.

Mechanics/electronics

Supply voltage U_B	10 V DC ... 30 V DC
Ripple	< 10 %
Current consumption	≤ 15 mA [1]

[1] Without load.
[2] Signal transit time with resistive load.
[3] With light/dark ratio 1:1.
[4] A = V_S connections reverse-polarity protected.
[5] B = inputs and output reverse-polarity protected.
[6] D = outputs overcurrent and short-circuit protected.

Switching output	PNP
Switching mode	Dark switching
Switching output detail	
Switching output Q1	PNP, Dark switching
Switching output Q2	Not connected
Output current $I_{max.}$	100 mA
Response time	≤ 500 µs [2]
Switching frequency	1,000 kHz [3]
Connection type	Cable open end, 4-wire, 2,000 mm
Cable material	Plastic, PVC
Conductor cross section	0.13 mm²
Circuit protection	A [4] B [5] D [6]
Protection class	III
Weight	4.54 g
Polarizing filter	✓
Special device	✓
Housing material	Plastic, ABS
Optics material	Plastic, PMMA
Enclosure rating	IP67
Ambient operating temperature	–40 °C ... +55 °C
Ambient temperature, storage	–40 °C ... +70 °C
UL File No.	E189383

[1] Without load.
[2] Signal transit time with resistive load.
[3] With light/dark ratio 1:1.
[4] A = V_S connections reverse-polarity protected.
[5] B = inputs and output reverse-polarity protected.
[6] D = outputs overcurrent and short-circuit protected.

Connection type/pinouts

Connection type	
	Cable open end, 4-wire, 2,000 mm
Connection type Detail	
Cable material	Plastic
Conductor cross section	0.13 mm²
Pinouts	
BN	+ (L+)
WH	Q_2
BU	- (M)
BK	Q_1

Certificates

EU declaration of conformity	✓
UK declaration of conformity	✓
ACMA declaration of conformity	✓
Moroccan declaration of conformity	✓
China RoHS	✓

Classifications

ECLASS 5.0	27270902
ECLASS 5.1.4	27270902
ECLASS 6.0	27270902
ECLASS 6.2	27270902
ECLASS 7.0	27270902
ECLASS 8.0	27270902
ECLASS 8.1	27270902
ECLASS 9.0	27270902
ECLASS 10.0	27270902
ECLASS 11.0	27270902
ECLASS 12.0	27270902
ETIM 5.0	EC002717
ETIM 6.0	EC002717
ETIM 7.0	EC002717
ETIM 8.0	EC002717
UNSPSC 16.0901	39121528

Dimensional drawing

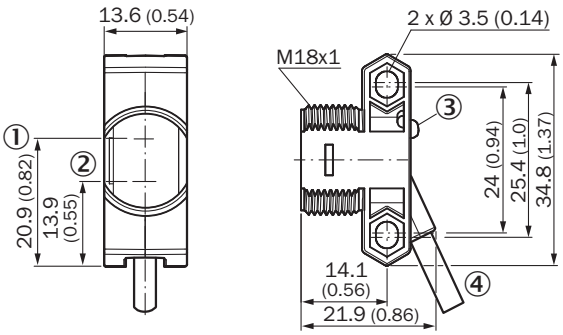

Dimensions in mm (inch)
① optical axis, sender
② optical axis, receiver
③ LED status indicator
④ Connection

Pinouts, see table Technical data: Connection type/pinouts

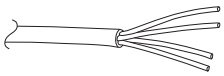

Cable with flying leads, 4-wire, AWG 26, 0.15 mm²

Characteristic curve

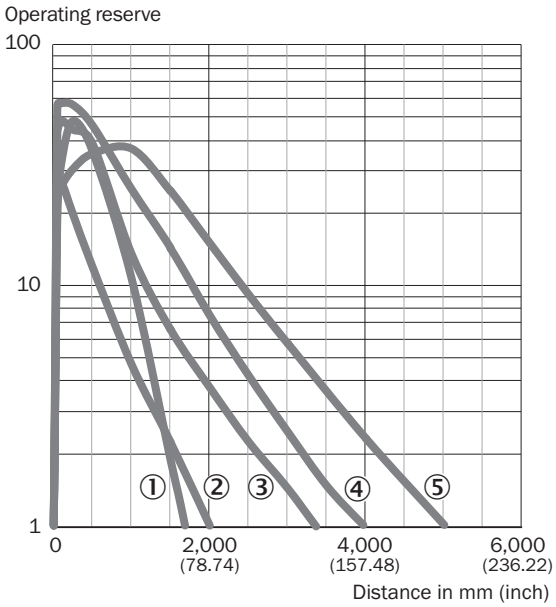

① Reflector PL23 FT
② Reflector PL20A
③ Reflector PL250
④ Reflector PL40A
⑤ Reflector PL80A

Sensing range diagram

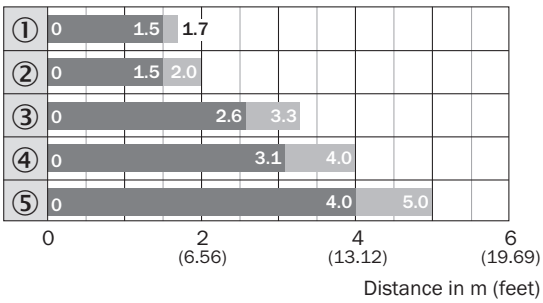

Sensing range Sensing range max.

① Reflector PL23 FT
② Reflector PL20A
③ Reflector PL250
④ Reflector PL40A
⑤ Reflector PL80A

Recommended accessories

Other models and accessories ➜ www.sick.com/Z18_Simple_Sense

	Brief description	Type	part no.
Mounting systems			
	• **Description:** Universal mounting bracket for reflectors • **Dimensions (W x H x L):** 85 mm x 90 mm x 35 mm • **Material:** Steel • **Details:** Steel, zinc coated • **Suitable for:** C110A, P250, PL20, PL30A, PL40A, PL80A	BEF-WN-REFX	2064574
	• **Description:** Mounting bracket for M18 sensors • **Material:** Steel • **Details:** Steel, zinc coated • **Items supplied:** Without mounting hardware • **Suitable for:** GR18, V180-2, V18, W15, Z1, Z2	BEF-WN-M18	5308446
reflectors and optics			
	• **Description:** Rectangular, screw connection • **Dimensions:** 51 mm 61 mm • **Ambient operating temperature:** –30 °C ... +65 °C	P250	5304812

SICK AT A GLANCE

SICK is one of the leading manufacturers of intelligent sensors and sensor solutions for industrial applications. A unique range of products and services creates the perfect basis for controlling processes securely and efficiently, protecting individuals from accidents and preventing damage to the environment.

We have extensive experience in a wide range of industries and understand their processes and requirements. With intelligent sensors, we can deliver exactly what our customers need. In application centers in Europe, Asia and North America, system solutions are tested and optimized in accordance with customer specifications. All this makes us a reliable supplier and development partner.

Comprehensive services complete our offering: SICK LifeTime Services provide support throughout the machine life cycle and ensure safety and productivity.

For us, that is "Sensor Intelligence."

WORLDWIDE PRESENCE:

Contacts and other locations –www.sick.com

SICK
Sensor Intelligence.