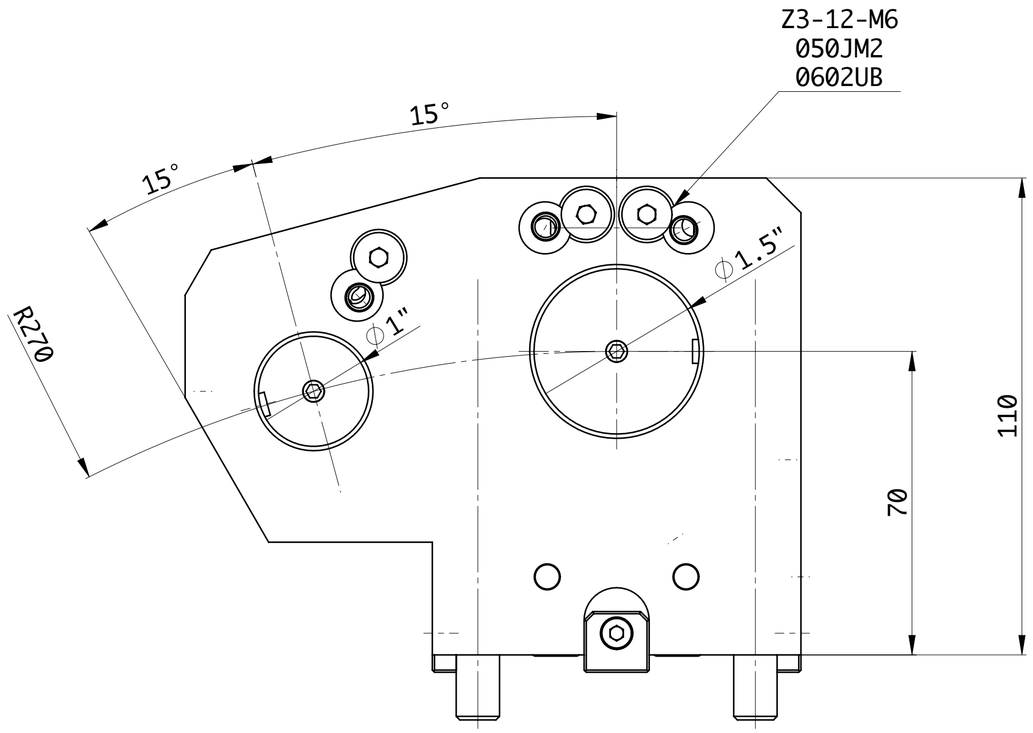


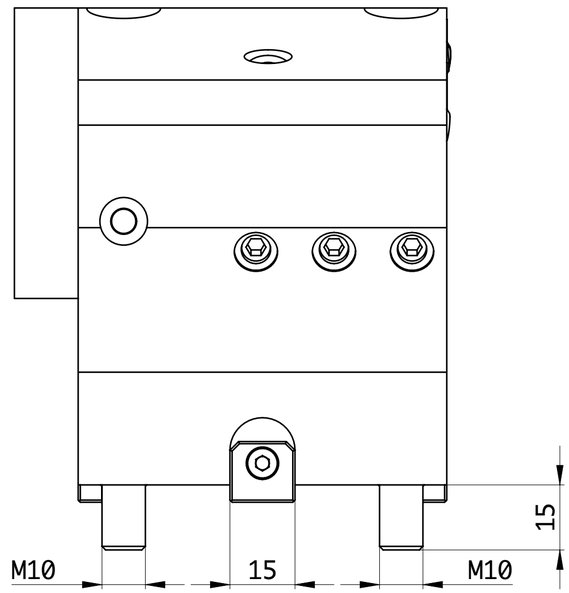


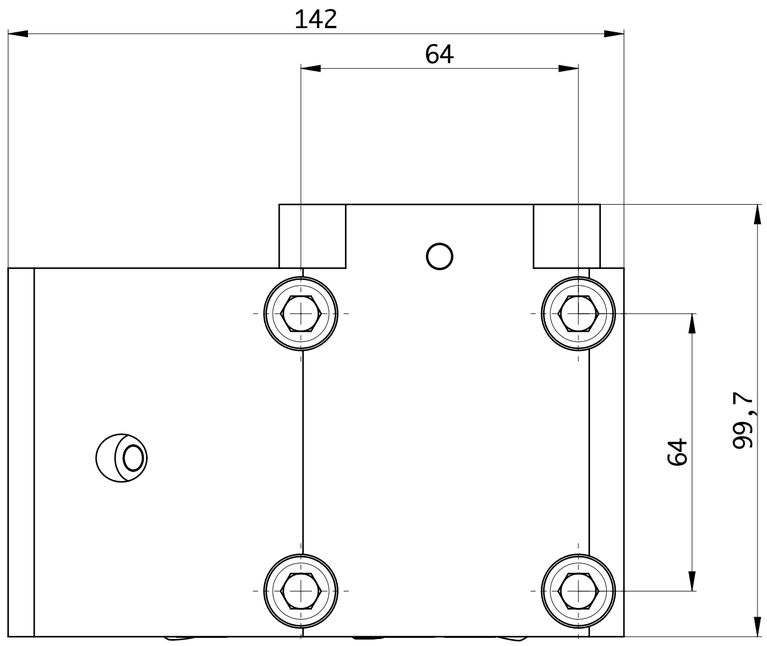


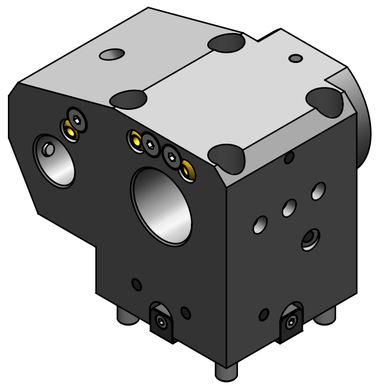

| | | |
|---|---|---|
| Commercial Code: E12/IBD1.5"/1"T55X70 | | |
| Denomination: INDEX BORING BAR HOLDER Ø1.5"/Ø1" | | Item Code: B55-00-0018 |
| Speed Max (out) rpm | Max Power Kw | Info: ALGRA S.p.A. Via Manzoni 41, I-24031 Almenno S.Salvatore (BG) Tel. +39 035642051 Fax +39 035640128 algra.accessori@algra.it |
| Ratio n1 : n2 | T2. Max Nm | |
| Pressure Max bar | Filtration µm | |
| Weight 7.936 Kg | Output | |

QUESTO DISEGNO E TUTTE LE INFORMAZIONI CONTENUTE SONO DI NOSTRA PROPRIETA'. NON PUO' ESSERE DIVULGATO O COPIATO SENZA NOSTRA AUTORIZZAZIONE SCRITTA E DEVE ESSERE RESO SE RICHIESTO
THIS DRAWING AND ALL INFORMATION THEREON IS OUR PROPERTY AND MAY BE CONFIDENTAL. IT MUST NOT BE MADE PUBLIC OR COPIED UNLESS AUTHORIZED BY US AND IS SUBJECT TO RETURN UPON REQUEST
DIESE ZEICHNUNG IST UNSER EIGENTUM UND DARF OHNE UNSERE GENEHMIGUNG WEDER VERVIELFÄLTIGT NOCH DRITTEN PERSONEN, INSBESONDERE KONKURRENZFIRMEN AUSGEHÄNDIGT ODER MITGETEILT WERDEN

A2