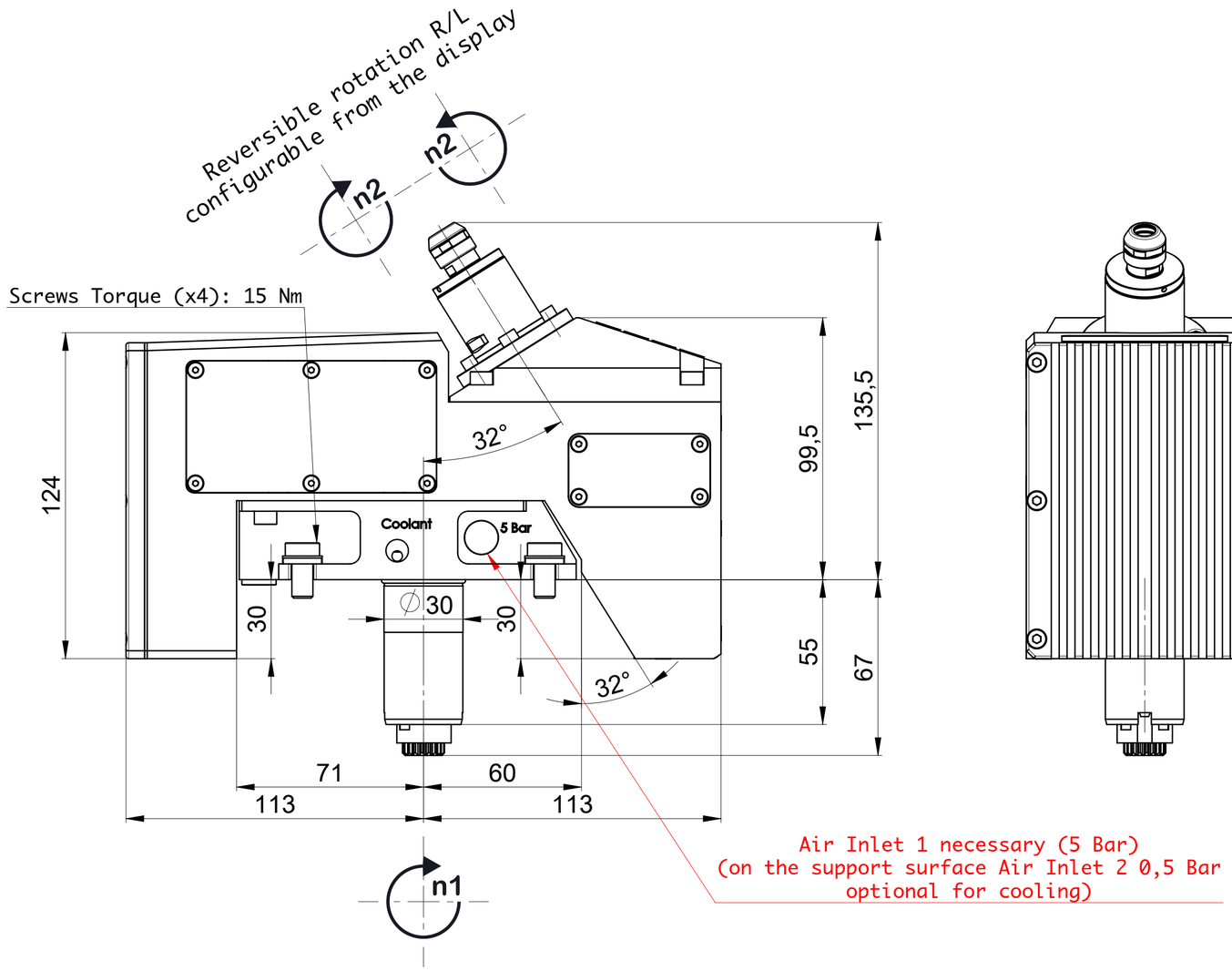

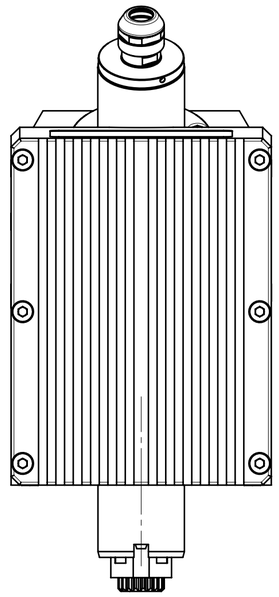

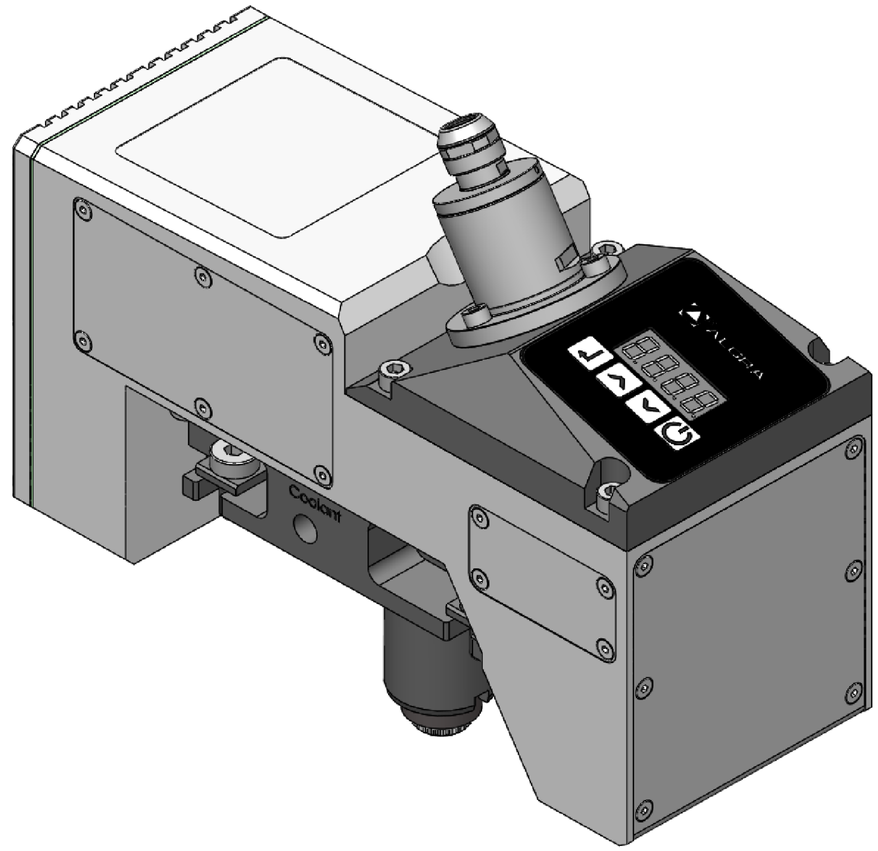

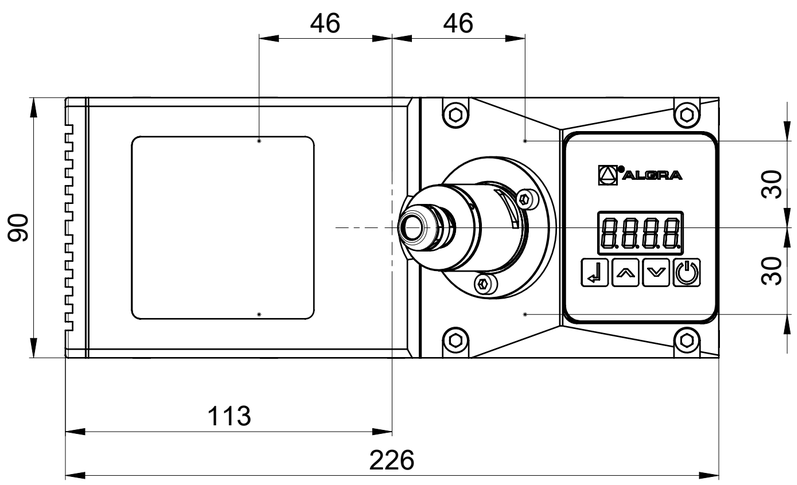

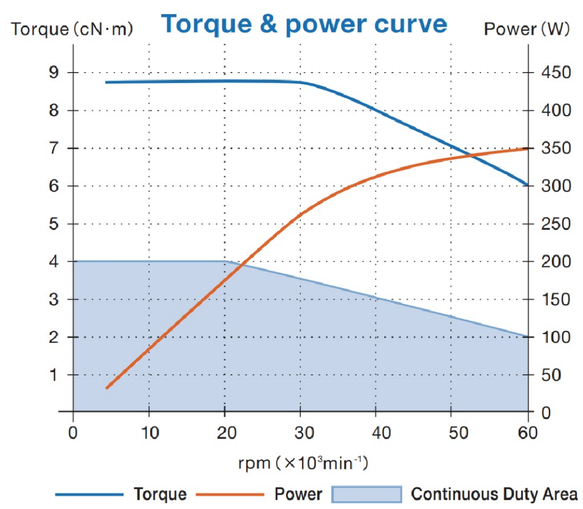

Range Ø tool=0,5-4 mm
Variation Ø tool < 0,01 mm
High precision collets

Commercial Code: RIPNK 60 12EDNZI		
Denomination: Driven tool-Fixed angle		Item Code: AZI101
Speed Max (out) 30000÷60000 rpm	Coolant	Weight 6.136Kg
Run-out 0,001 mm	Max Power 350 w	Info: ALGRA S.p.A. Via Manzoni 41, I-24031 Almenno S.Salvatore (BG) Tel. +39 035642051 Fax +39 035640128 algra.accessori@algra.it
Pressure Max bar	Constant Speed (in) 4000 rpm	
InPut BMT30 (NZI)	Output Nakanishi	

QUESTO DISEGNO E TUTTE LE INFORMAZIONI CONTENUTE SONO DI NOSTRA PROPRIETA'. NON PUO' ESSERE DIVULGATO O COPIATO SENZA NOSTRA AUTORIZZAZIONE SCRITTA E DEVE ESSERE RESO SE RICHIESTO
THIS DRAWING AND ALL INFORMATION THEREON IS OUR PROPERTY AND MAY BE CONFIDENTIAL. IT MUST NOT BE MADE PUBLIC OR COPIED UNLESS AUTHORIZED BY US AND IS SUBJECT TO RETURN UPON REQUEST
DIESE ZEICHNUNG IST UNSER EIGENTUM UND DARF OHNE UNSERE GENEHMIGUNG WEDER VERVIELFÄLTIGT NOCH DRITTEN PERSONEN, INSBESONDERE KONKURRENZFIRMEN AUSGEHÄNDIGT ODER MITGETEILT WERDEN

A2